AFPM
114th American Fuel & Petrochemical Manufacturers
ANNUAL MEETING

DAY THREE Wednesday | March 16, 2016 | #AM16
Conference Daily Published by HYDROCARBON PROCESSING®

AFPM leaders work to clear regulatory hurdles

BEN DUBOSE, *Hydrocarbon Processing*

Top officials at AFPM say they are working to resolve a "stifling regulatory regime" from the US government aimed at sectors that include refining and petrochemicals.

"The US Environmental Protection AGENCY'S (EPA's) pace at issuing new regulations is unmatched by all other federal agencies," Chet M. Thompson, president of AFPM, said at the Annual Meeting's press conference this week. "To be clear, AFPM believes that smart, tailored and transparent regulations are appropriate. Unfortunately, the EPA doesn't always take this road.

"Too often, regulations are based on cherry-picked science, utilize tenuous statutory authority and overstate benefits while understating costs."

Since 2000, the EPA has adopted 19 rules that each have annual compliance costs of greater than $1 B, Thompson said. Of those 19, he says that 12 have been implemented in the past eight years of the Obama administration.

"That's a damaging and costly pace," Thompson said.

In the past year, issues addressed by the EPA include the announced Clean Power Plan (which has since been halted by the US Supreme Court), lower ozone standards, the lifting of the crude export ban, enhanced tank car standards for moving crude by rail, and the release of the final volume requirements for the 2014, 2015 and 2016 Renewable Fuel Standard (RFS).

"Unfortunately, the common theme among all of these problems is not the competitive marketplace, but instead the US federal government, which has placed layer upon layer of bureaucracy and cost burdens on US manufacturers and consumers," Thompson said.

► See AFPM, page 4

CHET M. THOMPSON, president of AFPM (left) and **GREGORY J. GOFF,** chairman of the AFPM board and CEO of Tesoro, discussed issues of interest to the refining and petrochemical industries.

Sinclair Oil expands presence as 100-year anniversary approaches

BEN DUBOSE, *Hydrocarbon Processing*

US refiner Sinclair Oil is celebrating its 100th anniversary in 2016 with a new campaign aimed at increasing the company's brand awareness throughout the country.

Sinclair Oil, which was formed when founder Harry F. Sinclair consolidated the assets of 11 small petroleum companies in 1916, was recognized for its pending anniversary at this week's AFPM Annual Meeting. The official 100-year anniversary date is May 1, 2016.

"Our centennial will be a celebration of the years, but primarily of the people and communities that have made Sinclair what it is today; one of the oldest continuous brands in the oil industry," said Ross Matthews, CEO of Sinclair Oil. "We celebrate the past, but continuously look to the future, combining our time-honored values with tomorrow's technology to deliver cleaner, more powerful products."

Sinclair Oil's representatives at AFPM included **PAUL S. MOOTE,** vice president of refining operations, and **CLINT W. ENSIGN,** senior vice president of government relations.

Sinclair is a privately-held Wyoming company with executive offices in Salt Lake City, Utah, and more than 1,200 employees across several states. Sinclair owns and operates an 85-Mbpd (thousand barrels per day) refinery in the small town of Sinclair, Wyoming, and a 24,500-bpd refinery in Casper, Wyoming, along with a network of crude oil and refined product pipelines and terminals in the Rocky Mountain and mid-continent regions.

The company currently markets fuel to more than 1,300 branded stations in 24 states. However, as the anniversary approaches, Sinclair aims to expand that presence.

► See SINCLAIR, page 15

INSIDE THIS ISSUE

Honeywell UOP

Meet Regulatory Compliance With Low Capital Expenditure Solutions

GREEN REVAMPS AND CO-PROCESSING

REVAMP YOUR REFINERY WITH THE UOP RENEWABLE JET FUEL PROCESS™

Refineries that revamp using the Honeywell UOP Renewable Jet Fuel process turn waste feedstocks into high-quality renewable diesel or renewable jet fuel, resulting in a stream of additional profits without high capital investment costs. In addition, the production of renewable fuel helps these companies lower their compliance costs.

Inedible Oils, Fats & Greases

ECOFINING™ PROCESS
- Honeywell Green Diesel™
- Honeywell Green Jet Fuel™

UOP RENEWABLE JET FUEL PROCESS™
- Honeywell Green Jet Fuel™
- Honeywell Green Diesel™

Revamp for **1/3** of the capital investment of a new plant

PRODUCE LOW CARBON RENEWABLE FUELS USING THE UOP FCC CO-PROCESSING SOLUTION

Production of low carbon cellulosic renewable fuels is available today with Honeywell UOP's FCC co-processing solution. Feed biocrude derived from sustainable biomass into the FCC unit to produce low carbon transportation fuels that meet compliance obligations with a low capital cost/high payback project.

Envergent Technologies
(UOP/Ensyn JV)

Biomass

Biocrude

UOP FCC CO-PROCESSING
- Low carbon transportation fuels

Marginal benefit between **$30-45** PER BARREL depending on market conditions

PROFITABLE COMPLIANCE SOLUTIONS

Whether you want to increase profits or lower the cost of meeting today's compliance requirements, creating renewable fuels using UOP's green solutions will deliver long-term profits that aren't subject to the wild swings of crude oil prices. Refinery revamps and FCC co-processing are easily implemented solutions without outrageous capital funding needs.

To learn more about UOP renewable fuel technologies, visit **uop.com/renewables.**

Valero CEO sees teamwork as core value for refining safety, performance

BEN DUBOSE, *Hydrocarbon Processing*

Even in March, it remains football season at refineries owned by Valero.

Joseph W. Gorder, chairman, president and CEO of US-based refiner Valero, detailed his company's strong commitment to safety in his address at Tuesday's industry leadership breakfast. He frequently used football analogies to illustrate his company's views on making safety a priority.

"Our combined employee and contractor injury rate was our best ever, and we take a lot of pride in that," Gorder said. "Safety and reliability are imperative for profitability."

Valero and its subsidiaries employ approximately 10,000 people, and its assets include 15 petroleum refineries with a combined throughput capacity of approximately 3 million bpd; 11 ethanol plants with a combined production capacity of 1.3 billion gal/year; a 50-MW wind farm; and renewable diesel production from a joint venture.

Gorder pointed out that many engineers in the Annual Meeting audience could also take pride in the company's achievements, since many of those groups work in partnership with Valero employees at the refineries.

For Valero specifically, the company continues to place emphasis on having all of its refineries approved as Voluntary Protection Program (VPP) Star Sites, which is the highest level of safety achievement recognized by the US Occupational Safety and Health Administration (OSHA).

To reach Star status, sites must develop processes that drive continuous improvement in process and occupational safety, and pass a rigorous onsite review by OSHA or its state affiliates. The sites must be re-approved every three years to retain the Star.

Eight Valero refineries are currently Star Sites—the most of any US refiner—and numerous contractors at the refineries have also earned the designation. The company's Pembroke refinery in Wales is also developing a Valero VPP program.

The football theme includes a friendly competition between plants and around programs and processes that are part of a healthy safety program. The goal is for each plant to always be "moving the ball" forward to improve safety. Refineries compete with one another to earn points, or "yardage," by demonstrating high levels of performance within the VPP program.

"The football theme is a great concept," said Gorder. "You have to play as a team and execute on the fundamentals. Safety is very fundamental to our success at Valero."

Gorder notes that Valero has embraced the mantra of "Every day is game day," adding that employees at the honored sites receive customized Valero football jerseys as a reward for their performance. The authentic jerseys are black, with "Valero" across the front, aqua-colored numbers on the front and back that correspond to the year each employee was hired, and the employees' last names across the back of the jersey.

"The general idea is to promote teamwork in safety, and drive home the point that every individual plays a role in the team's success," Gorder said.

The good news is that, assuming safe operations, the Valero CEO holds a fairly optimistic view for refiners moving forward.

In his Tuesday remarks, Gorder emphasized that global petroleum demand growth is expected to outpace refinery capacity expansions through 2020, owing to a slowdown in the growth of global refining capacity.

Because of demand exceeding supply, global margins and utilization rates are each expected to increase, he said.

By location, Valero believes that the US Gulf Coast and the Middle East will be the most advantaged refining locations, since each can leverage a competitive advantage with crude feedstocks. Meanwhile, refiners in Western Europe could struggle with declining regional demand, and refineries in Asia's developed countries could be challenged by growth from emerging nations like China and India.

"There are winners and losers out there, but the bottom line is that US refining is well-positioned to be competitive," Gorder said.

Even with the dip in oil prices over the past year, Gorder noted that upstream producers have improved their efficiencies to allow production to continue. As a result, North American refiners like Valero continue to produce more locally sourced oil.

"There was a period last year where we weren't processing any foreign crude," he said.

Going forward, Gorder says that technological and operational advances have supported continued growth in crude supply, and that should give North American refiners a competitive advantage with ample and flexible feedstocks. This is likely to drive high utilization rates for the foreseeable future.

"The fundamental outlook is very favorable," Gorder said. "We see continued economic growth and sustained low oil prices stimulating oil demand, especially in the US."

Even so, the forecast is not without risk. Gorder cautioned that major geopolitical and political issues, such as a violent event that could rattle consumer confidence, might ultimately lead to lower demand than expected.

For now, however, the US refining industry is well-positioned on multiple fronts, with safe operations leading the way.

"Our industry produces products that make people's lives better, and we do it in a safe and responsible way," Gorder said in closing. "We should never be ashamed of what we do." •

Valero CEO **JOSEPH W. GORDER** made an impassioned plea for a commitment to safety during his remarks at Tuesday's industry leadership breakfast.

REMOVING DESALTER TRAMP AMINES WITHOUT USING ACIDS

At the AFPM Annual Meeting, James Noland of Dorf Ketal introduced new reactive adjunct chemistry designed to remove tramp amines in the desalter without using acids. Increasing crude flexibility without increasing operating costs, this program gives refiners a new way of safely reducing the accumulation of amines in desalter operation.

The patent pending new adjunct chemistry works by converting the amines in the desalter to water soluble imines that are easily removed with the brine. The reduction of amine content reduces desalter pH, which improves overall desalting and reduces the partitioning of the amines into the oil. The reduction of amines in the crude and overhead results in lower salt points in the overhead and reduces the risk of corrosion and fouling.

The oil industry uses approximately 300 million pounds per year of MEA-triazine for scavenging H_2S; this chemistry is the primary root cause of monoethanolamine (MEA) in the crude that can cause crude tower overhead corrosion. The extent of this contamination is difficult to measure and highly variable, frustrating efforts of refiners to deal with the crude flexibility challenges it creates. Previously, the only option for refiners to break this cycle was by using acid, an option with many safety and operational concerns.

The new reactive adjunct chemistry adds value at very low dosages, even when tramp amines are not a concern. The new chemistry is fed to the desalter with an emulsion breaker. The dosage of the emulsion breaker can be reduced to offset the cost of the reactive adjunct. The combination program reduces oil content in the brine, and improves desalting and dehydration efficiencies. •

AFPM

114TH ANNUAL MEETING CONFERENCE NEWS

Published by *Hydrocarbon Processing* as three daily editions, March 13–14, 15 and as an electronic edition on March 16. If you wish to advertise in this newspaper or submit a press release, please contact the editor at Mike.Rhodes@GulfPub.com.

Publisher
Bret Ronk

AFPM Contacts
Rebecca Adler
Diana Cronan

Editor
Mike Rhodes

Contributing Editors
Ben DuBose
Lee Nichols

Production Manager
Angela Bathe Dietrich

Hydrocarbon Processing
2 Greenway Plaza, Suite 1020
Houston, TX 77252-77046
713-529-4301

HYDROCARBON PROCESSING®
www.HydrocarbonProcessing.com

Advertisers:

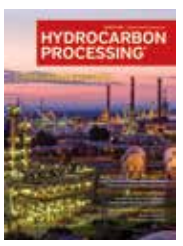

NEWS

MAKING RENEWABLE FUEL A COMMERCIAL REALITY

Animal fats and non-edible oils are being converted into Honeywell Green Jet Fuel at the world's first dedicated commercial-scale renewable jet fuel production facility. The plant, located near the Los Angeles International Airport, has also produced Honeywell Green Diesel, a drop-in replacement for diesel made from petroleum, using the same process technology.

AltAir Paramount LLC is the second US fuel producer using Honeywell UOP technology to produce renewable fuels, joining Diamond Green Diesel, which is producing renewable diesel in Louisiana. AltAir develops and operates projects for the production of low carbon fuels and chemicals derived from sustainable feedstocks. The company revamped an idle petroleum refinery in Paramount, California and is now producing more than 30 MMgpy (million gallons per year) of renewable transportation fuels for commercial and military use. United Airlines announced in 2013 its intention to buy 15 MM gallons of renewable jet fuel from AltAir over a three-year period.

Earlier this year, the U.S. Navy's Great Green Fleet, a carrier strike fleet of ships and aircraft, began using renewable fuel on regular deployments as part of the Navy's efforts to demonstrate and deploy alternative sources of fuel, reduce energy consumption, decrease reliance on imported oil and significantly increase use of alternative energy. The ships are being powered by a blend of renewable marine diesel from AltAir—made from domestic sources of inedible waste, fats, oils and greases—and petroleum-based marine diesel.

The renewable jet fuel process makes Honeywell Green Jet Fuel, as well as Honeywell Green Diesel, from a range of sustainable feedstocks such as used cooking oil, inedible corn oil, tallow, camelina, jatropha and algae. The process is compatible with existing hydroprocessing equipment commonly used in today's refineries, making it ideal for plants that can be converted to produce renewable fuels.

Honeywell Green Diesel offers up to an 80% reduction in greenhouse gas emissions versus diesel from petroleum. Chemically identical to petroleum diesel, Honeywell Green Diesel can be used in any proportion in existing fuel tanks without infrastructure changes. Unlike biodiesel, Honeywell Green Diesel is a drop-in replacement for traditional diesel.

GROUND BREAKING FOR TEXAS WORLD-SCALE SMR

Air Products has broken ground at Covestro's facility in Baytown, Texas, where the company will invest $350 MM–$400 MM to build, own and operate a world-scale steam methane reformer (SMR).

The SMR will produce hydrogen (H_2) and carbon monoxide (CO) to be supplied to Covestro and other customers linked to Air Products' Gulf Coast H_2 and CO pipeline networks. The new unit is expected to begin operations in 2018.

The SMR and cold box will be located on land leased from Covestro, a manufacturer of high-tech polymer materials for key industries. The SMR will produce approximately 125 MMscfd of H_2 and a world-scale supply of CO.

The Covestro's Baytown facility, its largest plant in North and Central America, produces primarily toluene diisocyanate (TDI) and methylene diphenylene isocyanates (MDI), in addition to coatings and adhesives, inorganic basic chemicals, polycarbonates and polyurethanes.

The new SMR will be built through the global H_2 alliance between Air Products and Technip, a world leader in project management, engineering and construction. The plant will feature the latest technology to maximize energy efficiency and reduce emissions, and will include optimal heat integration, which in turn lowers feedstock consumption. The plant configuration and deployed technologies support Air Products' overall sustainability goals of reducing energy consumption and emissions.

The new plant's ability to connect to Air Products' existing Gulf Coast Pipeline (GCP), the world's largest H_2 plant and pipeline network system, remains a value-added plus for H_2 customers in terms of ensuring product reliability. Air Products officially dedicated its GCP in 2012. The 600-m pipeline span stretches from the Houston Ship Channel in Texas to New Orleans, Louisiana, and supplies customers with over 1.4 Bfpd of H_2 from over 22 H_2 production facilities.

Hydrogen is widely used in petroleum refining processes to remove impurities found in crude oil, such as sulfur, olefins and aromatics, to meet product fuels specifications. Removing these components allows gasoline and diesel to burn cleaner.

"The new SMR strengthens our position in the Texas CO market and enhances our H_2 supply network," said Corning Painter, executive vice president, Industrial Gases at Air Products. ●

AFPM, continued from page 1

The leading legislative priority in 2016 is the RFS, according to Gregory J. Goff, chairman of the AFPM board and CEO of US refiner Tesoro.

Speaking at the press conference, Goff cited an apparent inconsistency between the Corporate Average Fuel Economy (CAFE) rule, which requires vehicle manufacturers to comply with mileage standards for fuel efficiency purposes, and the RFS, which requires the use of increasing volumes of biofuels—mostly corn ethanol—that are less fuel efficient than gasoline.

"Having one rule that requires better gas mileage and another that mandates the use of a lower energy value is a contradiction," Goff said.

Goff also cited recent reports that the corn ethanol required by the RFS might actually have a negative environmental footprint compared to traditional gasoline.

"For AFPM members, Tesoro included, the RFS remains our top policy priority," he said. "The cost of this policy to refiners can't be ignored."

Goff says that renewable identification numbers (RINs) were effectively created to serve as "coin of the realm" to prove compliance by companies with blending obligations.

"In theory, the use of these RINs, which were never intended to cost more than a couple of cents to reflect transaction costs, eased compliance nationwide," Goff said. "However, these credits have become a tradable commodity on an open market that has impacted every refiner and, ultimately, every consumer. In 2015, the industry's purchase price of RINs exceeded more than $1 B. Add to that the cost to refiners to replace invalid RINs purchased in prior years from EPA-certified companies, and the costs escalate."

Goff emphasized that the US industry has, in fact, spent billions of dollars on technology and innovation over the years.

"We are an industry that has found ways to evolve for decades, or we wouldn't exist," Goff said. "So, let me be clear—after 11 years, the RFS isn't performing as Congress intended, and it is getting worse."

The stated policy goals of the RFS were to foster US energy independence, diversify alternative domestic fuel supplies and yield net environmental benefits. However, Thompson and Goff contend that the RFS has failed to achieve those goals, noting that the desired energy independence has instead been realized by increased US oil production facilitated by technological advances in drilling.

Additionally, Goff contends that the evolution of advanced biofuels has not occurred at the pace envisioned by Congress, and conventional corn ethanol is threatening to fill the space created by the mandated volumes.

"At the end of the day, advances in fuel composition and efficiency—whether conventional, alternatives or a combination—must be the result of market-driven forces, not government mandates," Goff said. "Consumers should decide their fuel choice, not the government dictating from Washington. Reform or repeal of the RFS is long overdue and must be the top priority for the industry."

Thompson and Goff said they viewed the RFS as one of the most realistic policies for them to influence this year. While the group has not formally endorsed a presidential candidate during the primary process, Thompson says they intend to work with both parties on the issue.

"We're going to get a Republican nominee, we're going to get a Democratic nominee, and we're going to work with both of them to understand our concerns," Thompson said.

"If Ted Cruz can win in Iowa being anti-RFS, it tells me momentum is changing on RFS," he added.

While the RFS is the group's leading priority in 2016, it is not the only one. On another issue, Thompson noted that he has high hopes that Congress will continue the bipartisan progress made with the reform of the Toxic Substances Control Act (TSCA).

"This is one issue in which most of Washington agrees upon, and I'm optimistic that Congress will finally get TSCA modernization across the finish line this year," he said.

Meanwhile, a new priority for AFPM will be shining a greater spotlight on its concerns with the Jones Act. One example of this, Thompson said, is that it is now cheaper to export US crude to foreign refining competitors than it is to ship crude from the US Gulf Coast to the East Coast.

"We can't have impediments like the Jones Act, which hurts our domestic refiners' ability to get products to consumers," Thompson said. "In essence, the Jones Act is serving as a subsidy to foreign refining, and the RFS is serving as a tax on domestic refining. It's time to address these outdated policies."

Even with the policy concerns, Thompson expressed considerable optimism about the future of both the refining and petrochemical sectors. On the refining side, he noted that US refiners have invested billions of dollars to expand facilities, increase efficiency and improve flexibility.

On the petrochemical side, the US has become one of the most affordable countries in the world for production due to affordable feedstocks from the shale revolution. For that growth to reach its full potential, Thompson believes more regulatory reform is necessary.

"Moving forward, AFPM will be working on a full agenda led by commonsense regulatory reform—one based on sound science, transparency of data and legitimate cost/benefits analysis," Thompson said. "Although progress has been made, we will continue making that case to the next administration and a new Congress.

"Another message to these policymakers, and an important one, will be focused on the enormous benefits that the refining and petrochemical industries bring to consumers and to the economy. That's what we do." ●

Axens CCR Reforming Octanizing technology to Thailand refinery

As part of its Energy Efficiency and Environment Improvement project, Bangchak Petroleum selected Axens' continuous catalyst regeneration (CCR) reforming Octanizing technology to produce high-quality reformate, a high-octane blending stock, for its Bangkok, Thailand, refinery gasoline pool.

The CCR Reforming Octanizing technology (**FIG. 1**) is specifically designed to produce high-octane reformate from naphtha. The process features the following main characteristics:

- A simple side-by-side reactor arrangement for ease of construction and maintenance; a low structure for better access and safety; and flexibility in reactor design to optimize unit performance at minimum cost.
- The CCR system features a non-pulsing lift system for smooth operation, and exhibits one of the industry's lowest catalyst attrition rates for high onstream performance.
- The latest regenerator design with two distinct burning zones and a protective "dry burn loop" for significantly reduced catalyst aging with minimum loss of chlorides. The optimized oxychlorination section results in a further reduction in chloride consumption.
- The regenerator design is intrinsically compliant with the most stringent environmental regulations, notably on chlorides and particulate matter, without additional proprietary abatement equipment.
- The catalyst features outstanding selectivity, providing maximum reformate yield. In addition, its composition and mechanical strength provide highly stable performance over an extended catalyst lifetime.

The Bangchak project consists of a grassroots Octanizing unit (**FIG. 2**) with a design feed capacity of 12,000 bpsd (barrel per stream day). For this specific project, detailed studies based on competitive front-end engineering design (FEED) were conducted by an independent party, which demonstrated that Axens' technology solution was the most economically attractive option for the Bangchak Petroleum project. Startup is scheduled for the end of 2018.

Proven reliable technology was a key element for Bangchak Petroleum and for the viability of the project. Additionally, the Octanizing process was recognized as one of the most environmentally friendly processes on the market, through a combination of technology and catalyst design. This was another of the key deciding factors in the awarding of the contract. ●

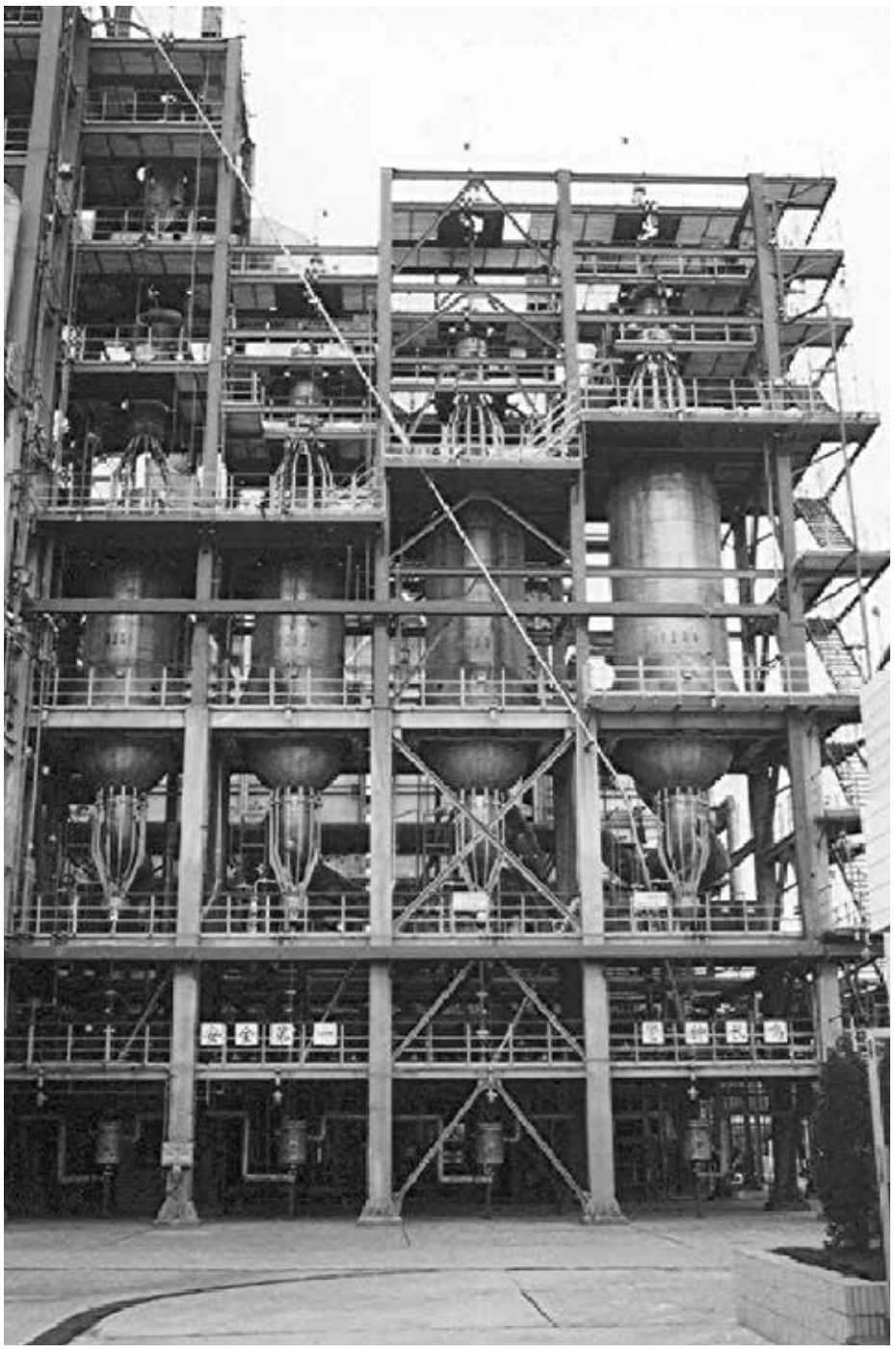

FIG. 1. The Axens CCR Octanizing unit. Photo courtesy of Axens.

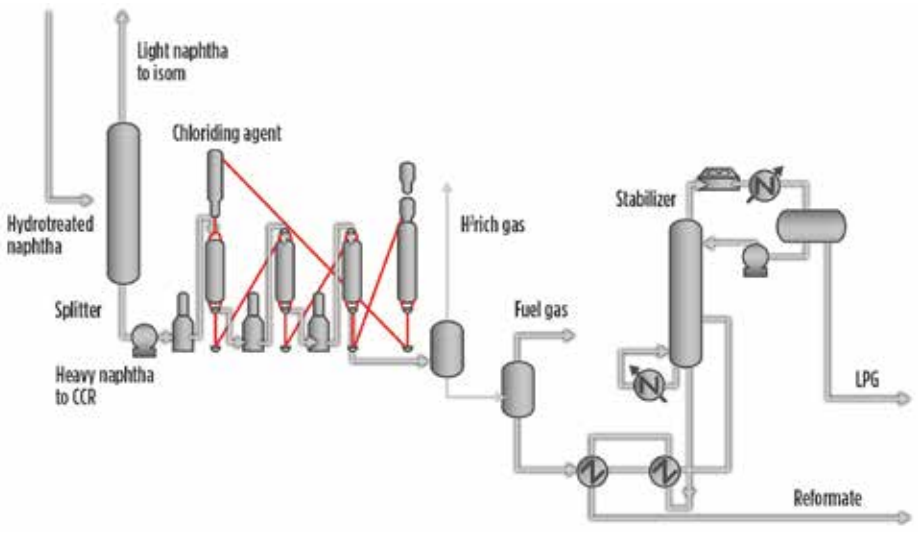

FIG. 2. The Octanizing unit schematic flow diagram.

NEWS

GE MODULES BUILD A SOLID FOUNDATION FOR THE IIOT

GE's Automation & Controls team, a combination of what was formerly known as GE's Intelligent Platforms and Alstom's Power Automation & Controls, is producing automation and controls technology solutions that are designed specifically to harness the power of the Industrial Internet of things (IIoT). They provide the foundation to connect machines, enable the collection of data from assets and processes, and help leverage that data to derive actionable insights.

The integrated SCADA Edge IPC provides the intelligent processing power to sift through vast amounts of data to uncover actionable information that can be used to proactively manage today's machines and factories. With SCADA/HMI software preinstalled, the IPCs deliver streamlined, real-time visibility and control to improve decisionmaking, increase operator effectiveness and reduce downtime in small- and medium-sized industrial applications through faster and smarter reactions at the plant floor level.

GE's Automation & Controls understands that long design cycles and high validation costs make it difficult for original equipment manufacturers (OEMs) to keep up with the latest processor technologies; processors deployed in harsh environments need to deliver the utmost performance at all times, under any condition.

The L1800 Skylake-based type 6 COM Express Module addresses the needs of many high-performance applications, utilizing the enhanced processing and power management capabilities of the latest Intel processors. This module is ideally suited for a wide variety of industrial and transportation applications in a broad range of embedded computing environments. The durable COMExpress solution reduces overall design cycle and validation costs to lower the total cost of ownership. Compared to the bCOM6 L1700, the L1800 is equipped with up to 32 GB ECC memory.

Equipment Insight is a cloud-based remote monitoring and diagnostics solution specifically designed for OEMs and fleet operators. It provides a secure means of monitoring installed assets and enabling them to quickly address issues by delivering the right information to the right person, wherever they are, and on any device. Powered by GE's Predix platform and Field Agent devices, the Equipment Insight solution collects and manages performance data and alarms and administers user access. Based on this historical data, the solution performs trend analysis of a single machine or an entire fleet and delivers role-specific KPIs, alarms and trends to designated personnel via mobile device applications or a web browser. ●

Wireless sensing improves refinery operations

ED SCHODOWSKI, Emerson Process Management

Emerson's experiences working with refiners and calculations show that the difference in operating costs associated with equipment reliability and energy efficiency between a well-run refinery and an average one is about $12.3 MMpy (million per year) for a typical 250-Mbpd facility. Assuming that about 60% of refineries are not operating as well as they could, the overall worldwide financial impact runs into hundreds of billions of dollars annually.

In terms of attaining peak performance, applying an Emerson Wireless Pervasive Sensing and predictive analytics strategy using wireless sensors enables additional process and asset health measurements to automatically collect data for further automated analysis. With predictive analytics, these additional data points are turned into alerts when abnormal operation or imminent failures occur, resulting in timely and corrective action to prevent failure.

Impacting the bottom line with informed decisions. When control and monitoring strategies are expanded with more sensors and their accompanying predictive analytics information, owner-operators are able to address multiple critical challenges simultaneously. This allows for more informed, timely decisions and safer and more consistent operation.

FIG. 1. A refinery pumping system with wireless transmitters.

Pervasive Sensing solutions add low-cost wireless points of measurements throughout the plant, monitor these points and alert plant personnel. This helps optimize production processes by monitoring the asset health of pumps, motors, steam straps, heat exchangers, valves, piping systems and other equipment.

This type of control system and instrumentation are independent of those already installed, because the Pervasive Sensing solutions are based on WirelessHART technology, an international industry standard IEC 62591.

WirelessHART, based on the HART standard, is compatible with virtually all new and legacy refinery control systems and is more widely used than any other process instrumentation communications standard. So, a Pervasive Sensing solution can be installed, running and improving operations in any refinery in short order.

Refinery issues. In complex refinery operations, it is sometimes difficult to make timely and informed decisions about operations and maintenance strategies. Often, the necessary information to pinpoint performance issues is unavailable. The first step toward improvement is to define the new sensing point locations, determine how the new information will be used and associate the economic values with each Pervasive Sensing application. Unscheduled outages and production slowdowns classified as mechanical unavailability occur from common problems, such as rotating equipment failure, heat exchanger fouling, piping corrosion and fired equipment constraints.

Energy losses occur from heat exchanger fouling, failed steam traps and process unit inefficiencies, all of which may go undiscovered from a lack of complete energy measurements. Refineries understand their macro energy performance through their energy intensity index, but determining exactly where energy is lost is a common challenge when driving an energy improvement program.

Monitoring of pumps. There are 10–15 LPG pumps in a refinery that are typically checked manually once a month for vibration, and bad actors are checked once a week. With ever-changing process conditions, infrequent spot inspections are insufficient to detect pump problems and seal failures. Hydrocarbon leaks are possible due to seal failures, which can lead to production losses, fires and even safety incidents.

Online monitoring of pumps through the addition of wireless measurement of vibration, pressure and seal fluid levels allows early detection of excessive vibration, cavitation and seal failure problems, respectively. Maintenance can be notified of pending problems, leading to improved production through fewer unscheduled outages.

If a pump fails in an LPG area and seals break, this presents a high risk of explosion. A refinery can see a $100k insurance premium risk reduction by adding automated monitoring to process pumps (**FIG. 1**).

Combating fouling conditions. Many refiners maximize their use of discounted opportunity crude oils, but using this type of feedstock often presents significant processing challenges. Crude unit preheat exchangers can foul unpredictably with incompatible crude blends and varying crude oil properties.

As a result, energy efficiency is lost and production limited. By adding additional wireless temperature measurements to heat exchanger banks, increased data can be provided to process analytics software that can then alert operations to excessive fouling conditions and rates (**FIG. 2**). The information can be used to determine incompatible crude blends and when an exchanger bundle requires cleaning.

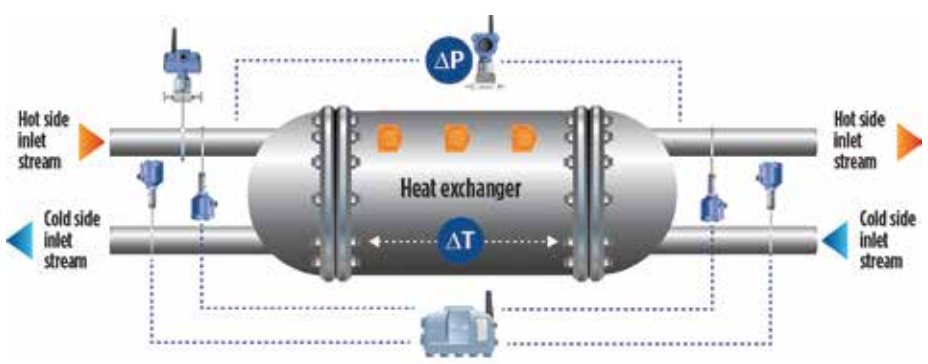

FIG. 2. Wireless transmitters on a heat exchanger.

Addressing issues with wireless. Companies building new refineries are exploring the benefits of Pervasive Sensing and predictive analytics strategies. A typical modern facility will have thousands of inputs and outputs to and from control and monitoring systems. These connections are both wired and wireless, depending on the specific nature and location of each input and output.

However, older refineries were built using wiring and only the instruments required to safely operate the plant, not necessarily to optimize or operate the plant reliably. The lack of inputs to control and monitor systems can cause refineries to run blind in many critical areas, or to perform expensive, time-consuming and resource-using manual checks via field rounds.

So, given the proven financial benefits, why haven't all refineries added thousands more points of measurement? In the past, these inputs would have been wired from the sensing point, such as a pump, to a control and monitoring system. Adding this wiring to an existing facility is usually a very expensive undertaking, and it often requires significant downtime, which is not an option as many refineries operate at or near full capacity.

Pervasive Sensing technologies allow these measurements to be quickly and inexpensively compiled. Wireless sensors are connected through a plant-wide wireless mesh network to control and monitoring systems, at a fraction of the cost and time of their wired equivalents.

TABLE 1 shows representative improvements and savings that are possible for a 250-Mbpd refinery.

A typical 250-Mbpd refinery has hundreds, if not thousands, of unmonitored processes, devices and systems open to unplanned failures or degraded operations. This insufficiency can waste energy, increase the probability of safety issues and escalate repair costs, potentially shutting down processes or even an entire refinery.

Pervasive Sensing solutions enable the automatic collection of process and asset health measurements, which can be analyzed and alerted of abnormal operation or imminent failure. This can improve safety, prevent releases that could result in fines and penalties, and extend the life of expensive process equipment.

The return on investment (ROI) for these Pervasive Sensing and predictive analytics solutions is typically only a matter of months, and implementation is relatively quick and simple compared to installing traditional wired sensor solutions. •

TABLE 1. Savings, implementation costs and ROI for a 250-Mbpd refinery

Application	Monitoring and analytics	Savings, $MM	Implementation cost, $MM	ROI, months
Heat exchanger monitoring	Fouling rate and limits	$2.7–$3.6	$0.62	3 months
Cooling tower monitoring	Efficiency and health	$0.3–$0.5	$0.16	4 months
Steam trap monitoring	Failure	$2.5–$3.3	$1.48	5 months
Relief valve monitoring	Releases and leaks	$2.4–$3.2	$1.59	6 months
Pump monitoring	Cavitation, pump health	$0.5–$0.6	$0.55	11 months
Air-cooled heat exchanger monitoring	Fan health and fouling	$0.9–$1.1	$1.20	13 months
Mobile workforce	Turnaround diagnostics	$1.6–$2.1	$0.40	3 months
Safety shower and eye wash monitoring	Trigger indication	Per incident	$0.39	Safety
TOTAL		**$10.9–$14.4**	**$6.40**	**5 months**

Improving profit margins with a refinery-wide process model

SANDEEP MOHAN, AspenTech

Refinery-wide models can be used to identify specific process areas for profit improvement, offer alternative improvement plans, and predict and compare the impact of each alternative on refinery profits. A refinery-wide modeling capability can evaluate the impact of refinery expansions or improvements, and determine operational responses to unexpected events. Refiners can improve profit margins in a challenging, competitive environment by ensuring that their planning models are up-to-date using rigorous process simulation software.

Profit margin analysis is a crucial exercise for refineries, which typically run on low margins—often around 5% or less—and are heavily dependent on fluctuating market conditions.

Changing market dynamics add to complexity. Demand is shifting toward lighter products, and the quality of oil is changing to more sour and heavy crudes. Environmental restrictions impose tighter fuel specifications in many locations. Processing is now more challenging, expensive and complex.

Selecting crude oil slates that reach profitability goals and meet final product specifications is operationally complicated, especially when refinery complexity ranges from a simple topping operation to a deep conversion facility integrated with a petrochemical plant (**FIG. 1**).

The probability of sustained low oil prices is forcing owner-operators to adopt cost-cutting and performance improvement programs that focus on asset utilization, downtime reduction, improved product quality and greater yield. The goals are simple, but refineries are not. The complexities of refinery operations and configurations make the decision-making process extremely difficult, especially given the uncertainty and differences in feed specifications, product demand and economic objectives.

A new model for a refinery-wide model. Cutting through complexity and driving higher margins can be achieved with a refinery-wide process model. Process simulation tools have helped refineries make the right decisions and respond to operational issues. However, the standard approach to simulating processes will not deliver the step change in performance that refineries need going forward. What is required is a complete and robust engineering system that can optimize the full plant, offer decision-support tools for fast responses and calculate costs to align with economic objectives.

Existing refinery-wide models can be cumbersome and complex. A manageable and easy-to-use solution that facilitates faster and better decision-making will allow refineries to quickly identify specific process areas in need of improvement, generate alternative improvement plans and predict the impact of each alternative on overall profitability (**FIG. 2**). Aspen HYSYS is a comprehensive process modeling tool used by the world's leading oil and gas producers, refineries and engineering companies for refinery-wide process simulation and process optimization in design and operations.

Such refinery-wide models are a mixture of short-cut and rigorous sub-models, and they can eliminate third-party maintenance expenses and enable quick, accurate profit margin analysis.

Integrating planning and process simulation tools with a single flow sheet. Simulating the entire refinery-wide process in a single flow sheet enables the evaluation of strategic options for both current and reconfigured operations. Using the process simulation model, planners and process engineers can simplify updates of planning models, evaluate the economic impact of operational improvements and unexpected events, and suggest remedial actions.

Varying refinery operating conditions cause planning models to become quickly outdated, making them ineffective for optimal refinery operations. A rigorous and predictive process simulation tool, can help keep the planning model up-to-date, thereby enabling refineries to make the most profitable product slate out of the most economical feedstock.

The first step in developing a refinery-wide process model is to reproduce the refinery-wide planning model. This is enabled by a "short-cut petroleum shift reactor model" within the process simulator that is an exact replica of the reactor representation used in the planning model. With an expanded complete suite of rigorous reactor models available in the process simulation environment—including fluid catalytic cracking (FCC), hydrocracking and delayed coking—the process engineer can selectively upgrade sub-models to rigorous models within a single process simulation environment. This allows refinery process engineers to easily manage and maintain the model, while ensuring the rigor required for accurate refinery margin analysis.

The calibration facility in process simulation tools ensures that the refinery model simulated is an actual reflection of current operating conditions. Key parameters from the models can be transferred into the planning tool. By sharing the same crude oil assay information, planning and process simulation models are consistent and contribute to better operational performance. Crude distillation unit (CDU) models in advanced process simulation software can be calibrated to provide configuration parameters for planning model sloppy cuts to better match plant performance. The integration of CDU modeling in the planning and process simulation tools significantly simplifies the workflow used to update the CDU portion of the planning model.

An integrated process simulation environment. A refinery-wide model uses a hybrid approach of linear models for high-level performance analysis, and fully rigorous crude distillation and reactor models for planning update and engineering studies. The refinery-wide model can be further extended to include other rigorous models, as necessary, to support various business scenarios.

Integration is key. A "clone" of the refinery model can be created, so a simple refinery-wide process model has the same level of sophistication and accuracy as a planning model. The rigor of the process model can then be enhanced by selectively inserting rigorous models of sub-units using graphical engineering flowsheet technology.

The refinery-wide process simulation model, enabled by an integrated process simulation environment, can be used to predict the impact of capital projects, such as reconfigurations planned to tailor the refinery to different crude and product mixes. It can also be used to evaluate the economic feasibility of operational improvements, such as a change in the catalyst for the FCC unit, or to determine the right response to unexpected events, such as breakdown of a key pump.

Most importantly, this capability initiates a culture of true partnership between planners and process engineers, building a system where planners use refinery-wide planning models to conduct rapid economic evaluations, while process engineers use refinery-wide process model to provide a more accurate profit margin assessment on a case-by-case basis. This collaborative use enables a holistic view of plant operations and supports flexible and agile refining operation. ●

The refinery-wide process simulation model, enabled by an integrated process simulation environment, can be used to predict the impact of capital projects and evaluate the economic feasibility of operational improvements, thus contributing to better performance.

FIG. 1. Reaching profitability goals, meeting final product specifications and complying with tighter environmental restrictions are making processing more challenging, expensive and complex.

FIG. 2. Refiners can improve profit margins in a challenging, competitive environment by ensuring that their planning models are up-to-date using rigorous process simulation software like Aspen HYSYS.

Are you taking full advantage of *Hydrocarbon Processing?*

Discover all the benefits of being a premium subscriber and gain full access to HydrocarbonProcessing.com

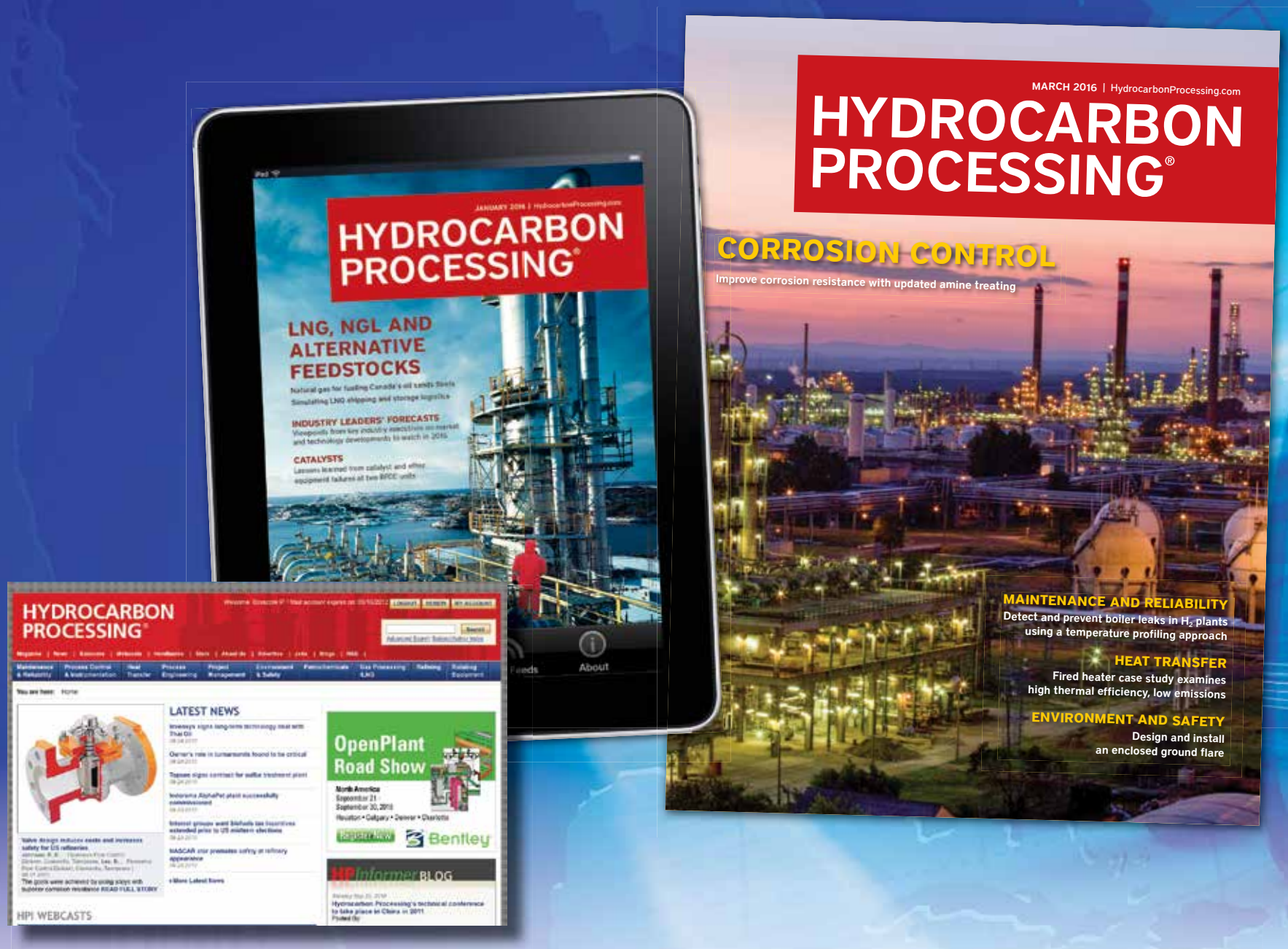

Subscriber Only Benefits

A subscription includes twelve monthly issues in print or digital format and premium access to HydrocarbonProcessing.com, where you will find:

- All the latest issues and Process Handbooks
- HP's extensive archive containing 10 years of back issues
- Receive each upcoming issue of *Hydrocarbon Processing* in your choice of print or digital format
- HPI Market Data 2016
- Daily e-newsletters

Published since 1922, *Hydrocarbon Processing* provides operational and technical information to improve plant reliability, profitability, safety and end-product quality.

Subscribe Today!

Log on to HydrocarbonProcessing.com or call +1 (713) 520-4440.

Improve reliability, decrease alarm count in refinery level measurements

BILL SHOLETTE and **CHRIS FOURNET,** Endress+Hauser

Gas phase compensation (GPC) and how it affects level readings of guided wave radar (GWR) devices is critical.

In many high-pressure vessels, redundant level measurement technologies are employed to provide multiple level indications for safety. It is common for the level measurement instruments to encompass different technologies to provide what is referred to as "diverse redundancy." A process condition that may affect one technology will likely not affect the other(s), ensuring that a reliable level measurement is being provided by at least one technology.

This concept introduces additional issues and concerns. From a safety standpoint, double or triple redundancy provides additional security; however, each level measurement technology must be monitored to compare the outputs and provide an alarm if the outputs deviate by a pre-determined percentage. While a process condition may "upset" a particular technology, it is very difficult to determine which of the redundant technologies is in an upset condition and which is operating properly. For safety reasons, it becomes necessary to take corrective action whenever the deviation between the level measurements exceeds this predetermined value.

Reliable, repeatable and redundant measurement. In high-pressure process vessels, diverse redundant level measurement is common. It is important that the technologies are reliable and repeatable to reduce alarms due to deviation.

GWR, also called time-domain reflectometry, is a time-of-flight level measurement technology for level measurement in high-pressure vessels. A microwave pulse is launched from the transmitter and follows a wave guide to the surface of the material being measured. The change of impedance created by the change from the gas phase to the material being measured causes the microwave pulse to reflect and return to the transmitter. The time the pulse takes to reach the material surface and return is divided by two, which provides the distance to the material being measured.

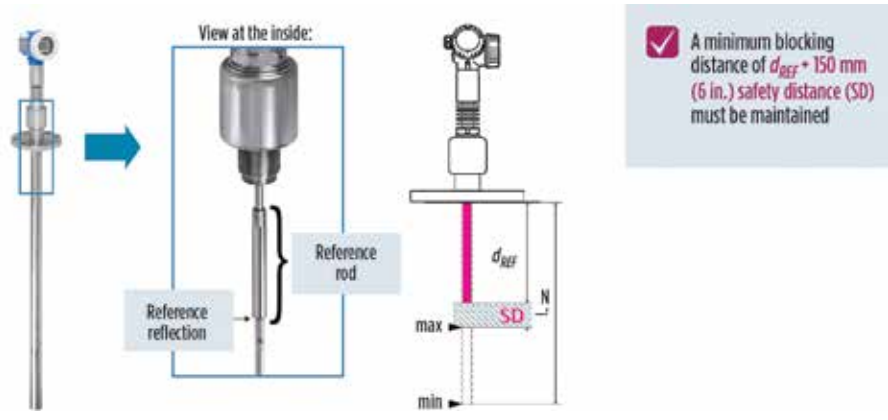

FIG. 1. Gas phase compensation: Construction/preconditions.

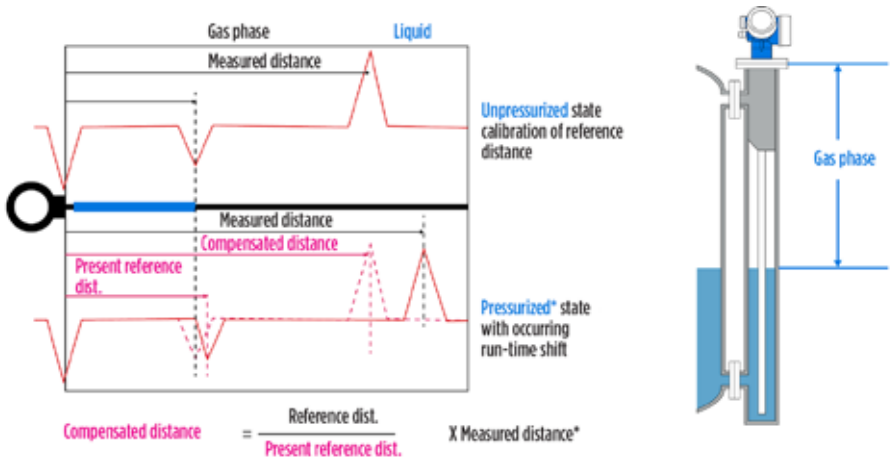

FIG. 2. Gas phase compensation using a reference rod.

How an instrument will function in the application in which it is being applied is particularly true of GWR transmitters in high-pressure vessels. Typically, a GWR will send a pulse through the upper gas phase in the vessel to reflect off of the liquid (or solid) material being measured. In high-pressure applications where the upper phase is made up of a gas with a polar molecule, special consideration needs to be taken to obtain this repeatable measurement.

Polar molecules alter the speed of the microwave pulse. The microwave is slowed by the polar molecule, resulting in an error in the measurement. Common polar molecule gases are steam (H_2O), hydrogen (H_2) and ammonia (NH_3). When these gases are present as the upper phase in high-pressure vessels, level measurements using a GWR will result in an error unless the reduction in speed of the microwave pulse, which slows as it propagates through the upper polar gas phase, is compensated. The result is an indicated level reading that is less than the actual process level.

Consider a steam drum application. The steam above the liquid water in the drum is made up of a polar molecule (H_2O), changing the signal speed and creating an error in the level reading proportional to the pressure and temperature (**TABLE 1**). Note that in a high-pressure steam drum at 2,900 psi, the error would be as high as 76%, which is unacceptable. Even at lower pressure, the error can be substantial. This becomes important when other level devices are measuring the same level and a deviation alarm is configured to look at the difference between level transmitters.

FIG. 3. The Endress+Hauser FMP54 was developed specifically for high-pressure and temperature applications. The reference rod is built-in to the top section of the unit.

Corrective re-calculations. Clearly, when using a GWR for measurement in high-pressure applications with polar molecules in the gas phase, corrections to the resulting error must be made based on pressure and temperature measurements. They would need to be re-calculated with every pressure change. This can be problematic, especially during startup operations.

A GWR can be manufactured with a reference section that provides the required compensation (**FIG. 1**). A reference rod, which is slightly larger than the measuring rod, is added to the wave guide near the top of the sensor. When the microwave pulse reaches the end of the rod, it senses an impedance and causes a reflection back to the transmitter. Since the reference rod is in a fixed location, the reflection from the rod should always be in the same location. As the pressure in the vessel increases and the microwave pulse begins to be affected by the polar molecules, the reference point will begin to look like it is farther down the sensor.

The transmitter can use the differential between where the reference is expected be to and where it is being reported to compensate for the speed change, thereby providing a correct level measurement (**FIG. 2**).

GPC using the reference rod is a dynamic real-time correction, and is particularly helpful during startup and shutdown operations when pressure is changing dramatically.

Many level refinery applications have high-pressure/temperature steam or H_2 present in the upper gas phase. In many cases, there is a 10% deviation alarm in place to help ensure a reliable level reading. When multiple level devices are used, refineries often elect to use different technologies, such as a wet-leg Dp, Capillary Dp, Magno-restrictive and GWR. It is obvious to see how polar gas affects a level reading. The GWR is expected to show a lower reading than the rest of the level devices, which must be calibrated and set up properly.

Endress+Hauser recognized the effect polar gas has on GWR and developed a device that compensates for the level deviation. The FMP54 (**FIG. 3**) was developed specifically for high-pressure and temperature applications with a unique reference rod built-in to the top section of the unit to combat the issue of polar gas, ensure reliability and accuracy, and minimize deviation alarms. ●

TABLE 1. Percent error based on temperature and pressure

Gas phase	Temperature	Pressure							
	°C, °F	1 bar, 14.5 psi	2 bar, 29 psi	5 bar, 72.5 psi	10 bar, 145 psi	20 bar, 290 psi	50 bar, 725 psi	100 bar, 1,450 psi	200 bar, 2,900 psi
Steam, water vapor	100°C , 212°F	0.26%							
	120°C, 248°F	0.23%	0.50%						
	152°C, 306°F	0.20%	0.42%	1.14%					
	180°C, 356°F	0.17%	0.37%	0.99%	2.10%				
	212°C, 414°F	0.15%	0.32%	0.86%	1.76%	3.90%			
	264°C, 507°F	0.12%	0.26%	0.69%	1.44%	3.00%	9.20%		
	311°C, 592°F	0.09%	0.22%	0.58%	1.21%	2.50%	7.10%	19.30%	
	366°C, 691°F	0.07%	0.18%	0.49%	1.01%	2.10%	5.70%	13.20%	76%

Cyber security for industrial control system backup

Bedrock Automation has introduced a cyber-secure, stand-alone uninterruptible power supply (UPS) for industrial control system applications. The Bedrock UPS.500 features onboard electronics that enhance the performance advantages of lithium ion (Li-Ion) polymer battery technology, manage the company's authentication cyber protection and enable secure Ethernet communications. A sealed NEMA4x aluminum housing provides protection from cyber tampering, enables its use in the most challenging field installations and provides Industrial Internet-of-Things-ready (IIoT) industrial control system power continuity.

As industrial devices get more intelligent, they also become more vulnerable to disruption. The industrial control system for the next generation of industrial operations requires battery backup that is more capable and robust.

Performance in a small footprint. The UPS.500 (**FIG. 1**) provides 24 V DC 12Ah of power for any distributed control system (DCS), programmable logic control (PLC) system, programmable automation controller (PAC), or supervisory control and data acquisition (SCADA) remote terminal unit (RTU) application. An onboard secure microcontroller controls the Li-Ion polymer battery cell-by-cell, augmenting the high-density, rapid charging, extreme temperature tolerance and extended life that characterizes Li-Ion technology. Compared to traditional systems using lead acid batteries, the UPS.500 extracts all of the advantages of lithium energy storage, including extreme energy density and significant improvements in size, weight and useful life. It also recharges 10 times faster than conventional lead acid battery system.

Because brownouts and other power interruptions can result in costly lost production, jeopardize quality and even introduce safety hazards, companies are investing heavily in large backup systems, which can take up valuable floor space and require expensive air conditioning. However, this centralized model may not be compatible with the IIoT. There is a now a developing trend toward distributed units that use less energy, less space and are less susceptible to external forces.

Embedded cyber security protection. The onboard electronics, comparable intelligence and memory enable Bedrock Automation's embedded ICS cyber security, which works transparently and instantly upon startup to manage the authentication process. This authentication strategy protects the hardware, firmware, software and communication of the UPS throughout its entire lifecycle.

Secure Ethernet. The secure onboard microcontroller provides secure 10/100 Mbit Ethernet IPv4 and IPv6 communications, and support for secure sockets layer (SSL) embedded web server and embedded IEC 62541–OPC unified architecture server. Bi-directional communications enable control, diagnostics and status reporting. More than 35 diagnostic variables can be easily and securely monitored, trended, alarmed and historicized via SCADA, enterprise and cloud applications.

Field ready. The UPS.500 is rugged, shock and vibration proof and designed for use in extreme environments. Encased in a sealed aluminum housing, the UPS.500 is compliant with IP67 and NEMA 4X standards for resistance to water, ice, oil and dust. The sealed all aluminum case reduces installation costs by eliminating the need for separate environmental protection enclosures. •

FIG. 1. The Bedrock UPS.500 is an Ethernet-enabled, cyber secure 24 V dc 12 Ah Lithium Ion polymer technology UPS, providing real-time monitoring, communication capabilities and secure integration into high-availability ICS applications.

UPCOMING AFPM EVENT

Reliability & Maintenance Conference & Exhibition

May 24–27, 2016
San Antonio, Texas

This year's 4-day program and exhibition focuses on operating company case studies aimed at improving reliability in the refining and petrochemical industries.

Future opportunities and challenges for FCC catalyst

BILGE YILMAZ and **MARK SCHMALFELD,** BASF Corp.

Fluid catalytic cracking (FCC) is the main conversion process in a typical fuels refinery. To satisfy the changing needs and requirements of the global energy landscape, both equipment and catalyst design have continuously evolved over the last 70 years. The pace of change has increased in the last decade, highlighting the need for catalyst innovation. Catalysts are typically seen as the first possible route to future FCC operations, as catalyst change can be implemented more quickly and without major refinery capital investment. Understanding future refinery FCCU needs and requirements will shape the catalyst of the future and drive design improvements.

TABLE 1 illustrates the key drivers for FCC catalyst innovation, the expected implications for catalyst development and the target features of the FCC catalyst of the future.

Tight oil. The recent US tight oil production growth has significantly changed the feed composition to FCCUs and is forecasted to grow to > 40% of the North American (NA) domestic crude production by 2020. Tight oil feeds are lighter and often more paraffinic in nature, resulting in lower octane in straight-run naphtha, as well as lower coke make. Even though they are low in traditional contaminant metals, such as nickel and vanadium, they contain higher levels of iron and calcium compared to conventional feeds. Together, iron and calcium form a eutectic that deposits on the surface of the catalyst particle. For a catalyst with unsuitable surface porosity, this can lead to a wide array of operational issues. This means that the iron tolerance of the FCC catalysts— which is a property directly related to the surface porosity, as well as the overall pore architecture—becomes even more important.

Other new challenges introduced with tight oil-containing feeds are related to the low coke make, which can lead to difficulties in maintaining a stable heat balance in the FCCU. Designing the coke selectivity of catalyst to be utilized in a tight oil processing FCCU is the key to a sustainable and profitable operation. Tight oil-containing feeds yield lower octane numbers compared to conventional feeds, and the FCC catalyst should be designed to make up for that loss by careful adjustment of its zeolitic cracking activity.

Another impact of the tight oil boom has been the increase in demand for butylenes in the North American refining landscape. Higher butylene is often desired as feed to the alkylation unit. As a market leader in supplying FCC catalyst to refineries that process tight oil, BASF sees the use of specifically tailored catalyst solutions as the best way to achieve the unit objectives and to tailor the olefin yield, as each unit has different constraints and economics. Continued FCC catalyst development is expected to support this critical market.

Opportunity crudes. Economic opportunity and lack of access to light gasoil feedstocks in some regions drives the refining industry to evaluate the utilization of opportunity crudes, such as resid feedstocks with highly contaminated metals levels (nickel and vanadium) and biomass-derived feeds. As refineries seek feedstock blending flexibility, it is vital to use an optimized catalyst for the target refinery objectives and to minimize the impact of refinery constraints. Future FCC catalyst developments here are focused on providing flexibility to refiners by adding design features for processing these feeds, such as active matrix technology, metals passivation technology, stabilization of zeolitic activity and enhanced pore architecture to minimize diffusional limitations.

Boron-based technology (BBT) is a recent example of such an innovation. BoroCat is the first product introduced by BASF based on the BBT platform, and it has commercially demonstrated the hydrogen and coke reductions through enhanced nickel passivation, together with a tailored catalytic activity and pore architecture, to improve overall yields. This is one example of the targeted innovations needed to exploit opportunity crudes.

Growing petrochemicals demand. Global demand remains strong for light olefins, especially propylene and, more recently, butylene. Roughly 70% of the propylene output from refineries is utilized as feedstock for the petrochemicals industry, and is the starting point for value-adding chains to produce polypropylene, acrylonitrile, propylene glycols, cumene, butyraldehydes, acrolein and other products. Propylene is mainly produced by steam crackers and FCCUs, which are the second-largest propylene producers globally. New world-scale refinery complexes (**FIG. 1**), as well as many recent refinery modifications, are designed to better integrate the petrochemical production into the overall design of the refinery and drive the product slate toward lighter products, such as propylene and ethylene.

To support this trend, future catalyst research and development is targeted to provide better control of hydride transfer with high activity to continue

▶ See **BASF,** page 15

FIG. 1. Future developments in MFI-type zeolite additives, such as BASF's ZIP, are integral to achieve petrochemical refinery goals.

TABLE 1. The four main drivers for future catalyst development

Drivers	Tight oil/ shale gas	Other opportunity crudes	Growing petrochemicals demand	Environmental regulations
Implications	• Iron/calcium • Heat balance issues • Abundance of natural gas-to-liquids (NGL)	• Higher/dirtier feeds • Higher contaminants • Increased H_2 and coke	• Increased demand for propylene and butylene from FCC	• Fuel quality specs • Opacity and other FCCU emissions
Future catalyst	• Iron-tolerant catalyst • Higher activity • Strong incentives to maximize butylenes for alkylation	• Novel concepts for enhanced metals passivation • Coke selectivity • Increased flexibility	• Better control of hydride transfer with high activity • Improved/tailored additive solutions	• Additive solutions • Attrition resistance • Continuous work to help refiners meet evolving regulations

SINCLAIR, continued from page 1

"We're opening up a new licensing campaign to take the Sinclair brand from coast to coast," Clint W. Ensign, senior vice president of government relations, said in an interview at the Annual Meeting. "We're going to let distributors use the Sinclair brand. Instead of being just in the Rocky Mountain and Central Plains regions, we're going to take it nationwide."

The company is well known for its iconic Apatsosaurus dinosaur logo, named Dino. After a nearly 40-year absence, a 70-foot-long balloon version of Dino returned to the Macy's Thanksgiving Day Parade in New York last year, representing the launch of the company's latest advertising campaign.

"We have moved into California, and we are close to moving in on the East Coast," said Ensign. "The brand is just so popular that we've decided to take it to all 50 states. People love a dinosaur, and we're just in the beginning stages of rolling that out. Part of this will be a licensing program where a distributor will secure their own supply but fly the Sinclair brand."

The expansion program will also include a new "TOP TIER" gasoline product for more complex engines, three-dimensional design technology to enable engineers to conduct pipe and structure improvements during refinery upgrades, and a newly redesigned website at SinclairOil.com.

"Big things are happening for Sinclair right now, and we want our online experience to reflect what our customers see at our stations and the level of service our distribution partners receive from our employees," Matthews said. "You're going to be seeing a lot more of Sinclair and our Dino brand in the future. Our new website will help us manage this growth and reach even more customers."

Turning to business, Sinclair officials said they continue to evaluate opportunities for further expansions, including the number of refineries it owns, as well as potential acquisitions or marketing partnerships.

"We're not a very big company, but we're very visible," said Paul S. Moote, vice president of refining operations at Sinclair Oil. "We're trying to utilize that visibility."

Moote noted that Sinclair refines exclusively North American oil that is mostly sourced from the US. With the drop in crude pricing, Moote said that less crude has been produced in the Rocky Mountain region, thus bringing more competition for those crudes and narrowing margins somewhat from their heightened levels of recent years.

However, Sinclair says its business continues to perform well due to the company's ability to handle a diverse crude slate.

"We have the ability to run quite a few different kinds of crude oil," Moote said. "We can be very flexible with what we run, and our refinery at Sinclair is one of the most diversified in the country.

"If the price [of oil] goes up, then producers will be back," he added. "Right now, our main concern is to make sure we have enough crude. We have crude oil lines into our refineries and also refined product lines."

As the company embarks on its second century of operations, Sinclair officials say they will do so with the same values as when Harry Ford Sinclair founded the company in 1916.

"Our emphasis has always been on safe, reliable operations," Ensign said. "That's one of our hallmarks. We've been a family-owned, privately-held company since 1976, and as we move into the future, we do so with those same family values." ●

BASF, continued from page 14

to improve light olefin selectivity and yields. Specific unit constraints often need to be included in the design of the best catalyst for tailoring the selectivity for propylene and butylenes, as the unit requirements need to be included in the design consideration.

Flexibility can be increased through the use of an appropriate FCC catalyst and improved additive solutions. Future developments in MFI-type zeolite additives, such as BASF's ZIP, are integral to achieve petrochemical refinery goals and to spur R&D efforts.

Environmental regulations. Increasing energy sustainability while improving the standards of living and meeting the transportation fuel requirements is a key target for industrialized society. No simple solution exists, as petroleum refining is forecast to continue to grow and remain the major supplier to the transport fuel demand. As part of BASF's sustainability efforts, the company continues to see catalyst improvements focused on the total conversion of crude oil into useful energy products.

Catalyst developments are also focused on helping refiners meet more stringent environmental regulations. Flexible catalyst and additive developments are targeted to help refiners meet regulations across a wide range of needs, and to focus on improving control of sulfur oxide (SO_x), nitrogen oxide (NO_x) and carbon monoxide (CO) emissions leaving the regenerator. They also help the refinery to control gasoline sulfur levels in gasoline and light cycle oil (LCO) fuels.

Increasingly stringent particulate matter (PM) regulations focus not only on particulate, but also on condensable particulates. These tighter limits have led to increased efforts to improve the attrition resistance of FCC catalysts while retaining or improving on the catalytic performance. Catalyst developments to decouple or reduce this linkage between attrition, pore architecture and catalytic performance continue to be at the forefront of these efforts, and are designed to help refiners meet tighter regulations without sacrificing catalytic performance.

Catalyst development is the key enabler for the future of FCC, which makes it a challenging and stimulating field of research. ●

Data analytic innovations improve refinery operations

MICHAEL RISSE, Seeq

Refineries often find themselves data rich and information poor, with millions of data points stored in historians and no easy way to extract value from this information (**FIG. 1**). This situation is changing, however, as Seeq and other companies have recently introduced data analytics software specifically designed to enable insights and extract value from the time-series data stored in historians. Such historians include OSIsoft PI, Honeywell PHD and InfoPlus 21. Several examples are available of how data analytics solutions are being applied to address specific refinery issues.

Better energy management delivers bottom-line benefits. In a refinery, energy accounts for a significant share of operating costs, so even small gains in efficiency go straight to the bottom line. However, most of the low-hanging fruit has already been picked, leaving the more difficult and challenging projects that can achieve significant energy savings.

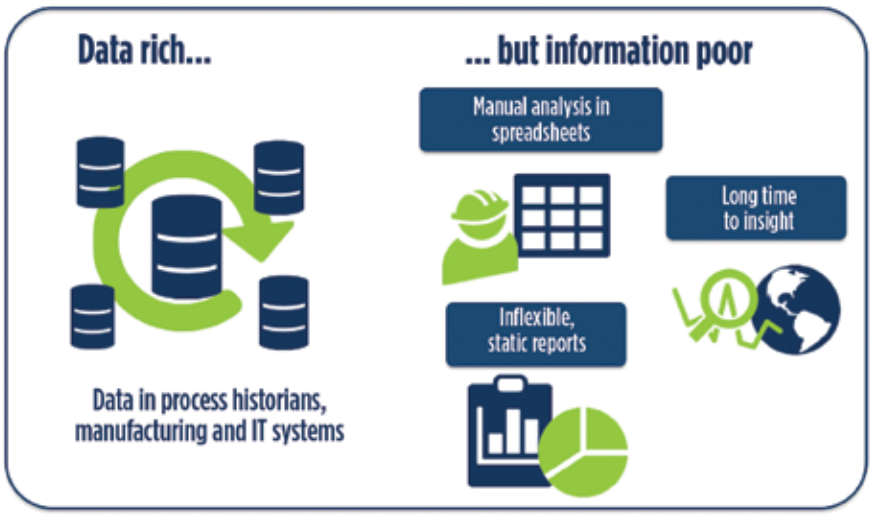

FIG. 1. Traditional data analytics tools, such as spreadsheets, are general-purpose and not specifically designed for extracting value from historian data.

Refinery sources of energy inefficiency include waste heat, steam systems and furnaces. Other sources of inefficiency are found in atmospheric distillation, vacuum distillation, delayed coker, hydrotreater, hydrocracker, catalytic reformer and alkylation units. Each operating unit produces huge volumes of data that are usually stored in information systems owned and managed by the operating disciplines. In many cases, this information goes unused.

A leading refiner is addressing this issue by deploying Seeq software to eliminate the excess effort required to visualize time-series data and align it with other contextual information sources. The refinery engineers can now search for historical patterns and uncover inefficiency signatures, process problems and potential equipment failures. More than 100 opportunities to reduce and suppress energy loss have been identified and addressed. What used to take days or weeks of analysis can now be accomplished in minutes or hours.

Increasing profits by using lower-cost feedstock. A major refiner in the Midwest was looking for ways to increase profitability, and found it needed to make quicker decisions to exploit changing market conditions. Despite having what the refiner thought were best-of-breed tools, decisions were taking too long and market opportunities were being missed.

Midwest refineries have typically been designed to accept lighter crude feedstock. Heavier feedstock occasionally trades at a discount, creating an opportunity for refiners to improve margins by sourcing this lower-priced supply. However, the information systems within many refineries make it difficult to make timely decisions about expected yields when accepting off-spec feedstock.

To make an informed decision, engineers must quickly answer the following questions:

- How far off-spec are my column products?
- How much does this deviation cost?
- How do the costs compare to the profit opportunity?
- What changes need to be made to process the feedstock?
- Is there a set of operation specifications to process the crude?

To answer these questions, data was imputed into modeling tools, with results transferred into complex homegrown spreadsheets for analysis. With this traditional approach, missing data was a common occurrence, requiring the engineer to use a best-guess approach to fill in the gaps, or to spend additional time to gather historical data from another point in time to rerun the model.

The refinery's engineers can now use Seeq to perform advanced analytics and extract actionable insights from their data in a timely manner (**FIG. 2**). Using context-based search capabilities similar to modern web search engines like Google, internal operating properties such as flow data, column temperature and pressure, heat exchanger inlet and outlet temperatures, pressure drops and boiling point curves are quickly gathered over a specified time period.

Data is automatically checked for inconsistent and missing information and quickly reconciled, if necessary. Unit-of-measure consistency is also ensured, eliminating the need for spreadsheet transformations. Search results are fed directly into the refinery model to analyze historical operating states for crude feedstock changes under existing operating conditions, and cost-benefit scenarios are stored for each time period. Results can be recalled and visually compared against one another, providing an overview of the process through time.

▶ See **SEEQ,** page 17

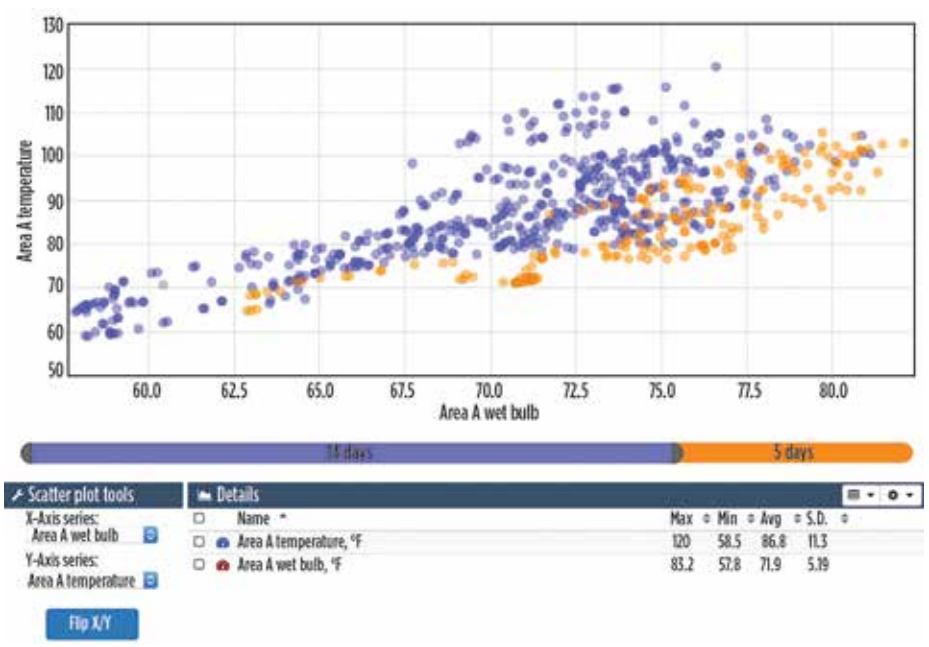

FIG. 2. Data analytics software specifically designed to interact with the time-series information found in historians allows process engineers and other specialists to quickly analyze and compare temperature and other process parameters.

Real safety depends on separation and diversity

In our increasingly connected world, "integration" sounds like a good idea. However, when it comes to process safety, owner-operators should think "island." An integrated control and safety system from one vendor isn't just a bad idea; it's dangerous.

- Integrated control and safety systems are subject to potentially devastating common cause failures.
- Separated control and safety systems provide a greater degree of safety and higher availability and reliability.

Keeping your business planning and control system (BPCS) and safety instrumented system (SIS) separate is safer and more secure. This can be proven mathematically and demonstrated through experience.

Standards support diverse, physically separated systems. International Electrotechnical Commission (IEC) and International Society of Automation (ISA) standards, as well as US Occupational Safety and Health Administration—Process Safety Management (OSHA-PSM) and Environmental Protection Agency—Risk Management Plan (EPA-RMP) requirements, indicate that control and safety systems should be diverse and separate.

SIS and BPCS diversity and separation suggests:

- Different developers and suppliers
- Physically separated hardware
- Diverse engineering tools and processes
- Various power supplies
- Different panels and monitoring stations.

IEC 61511-1states that "BPCS shall be designed to be separate and independent to the extent that the functional integrity of the SIS is not compromised." Some integrated system vendors see wiggle room in this statement, but HIMA does not.

The functional integrity of an SIS is always compromised when it is part of a co-located, integrated, non-diverse system. To prevent common cause, common mode and dependent failures, an assessment should consider the:

- Interdependency, diversity and physical separation between protection layers
- Common cause failures between protection layers and BPCS IEC 62443-3-3

Safety is not the only reason to have diverse, physically separated systems. Cybersecurity is an increasing threat that can potentially even impact physical safety. The IEC standard for security requires the same kind of assessment required by IEC 61511-1, but it also introduces the concept of security zones, defined conduits and additional firewalls at every conduit (**FIG. 1**).

Real separation requires independent layers of protection. International safety standards require independent layers of protection, which just makes sense. If two layers merge, e.g., the BPCS and SIS protection layers, the likelihood of an incident increases. Mingling the BPCS and SIS in any way, so that the failure of one might impact the proper operation of the other due to a systematic failure or common cause, effectively negates the concept of independent layers of protection (**FIG. 2**).

The advantages of real separation. When a SIS and BPCS are diverse and physical separated, the following advantages can be gained.

- Elimination of common cause errors that result in safety-critical situations or undesired shutdowns
- Avoidance of safety-critical design, programming and operating errors through the mixing of safe/non-safe elements (human common cause errors)
- Openness for multivendor interoperability
- Freedom to choose best-of-breed BPCS and SIS
- Compliance with standards and best engineering practices
- Greater legal certainty that comes from standards compliance
- Future-proof investments
- Improved security.

HIMA nonstop safety solutions can be integrated with all leading BPCSs, with features that include:

- Integration of alarms and events into the alarm management of the BPCS, and the integration of faceplates for operating and monitoring
- Transfer and visualization of diagnostic data
- Transfer and visualization of process data and safety-related locking states
- Timestamp transfer
- Maintenance override switch
- Partial stroke test
- Start-up bypass. ●

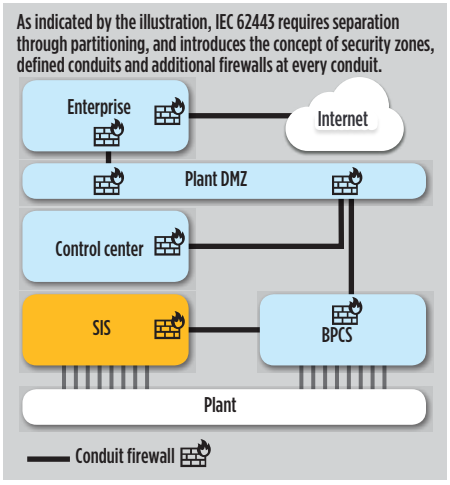

FIG. 1. IEC 62443 requires separation through partitioning, and introduces the concept of security zones, defined conduits and additional firewalls at every conduit.

SEEQ, continued from page 16

Predictive maintenance cuts costs and increases uptime. The reliability team at another refinery was seeking to avoid unplanned equipment outages. Maintenance of equipment was required periodically, but performing these tasks on a calendar basis was inefficient. Some items were serviced too frequently, adding to downtime and costs, while others were not serviced often enough, negatively impacting quality. Refinery maintenance management system information was frequently out of date.

Applying Seeq to data already resident in a historian, plant maintenance personnel now use pattern-based anomaly detection techniques to identify the actual state of equipment or a process. This identifies precursor events to unscheduled equipment outages and anticipates emerging process problems.

With real-time trending in place, equipment performance is monitored continuously, preemptive measures are taken when maintenance is required, and maintenance intervals are lengthened wherever possible.

The data analysis required to predict problems before they occur is quite complex, as it requires looking at real-time and historical data in context with work orders, notifications, incidents, operator logs, alarms and events, corrosion, inspection and equipment data to build a picture of conditions that cause failure.

Process and reliability engineers most familiar with the equipment and the operating units perform this complex analysis using Seeq, creating data signatures by using information from sensors monitoring equipment that is known to be in good running order, tracking deviations from these signatures, and automatically alerting plant personnel before problems occur.

The refinery's engineers now have affordable data analysis tools to prevent unplanned capacity losses.

Breaking away from traditional data analytics tools. Refineries often possess all the information they need to improve operations within their data historians, but creating insight from this information can be difficult, expensive and time-consuming using traditional data analytics tools.

Seeq now offers data analytics software specifically designed to interact with the time-series information found in historians. Since this software is designed for just one task, as opposed to a general-purpose tool like a spreadsheet, it provides a faster and less expensive solution. ●

SCENES FROM THE 2016 AFPM ANNUAL MEETING

1 Managing the complexities of asset management in refining companies was detailed by KPMG's **Hiran Bhadra** in a Tuesday morning reliability session.

2 Wood Mackenzie's **Alan Gelder** delivered a presentation at a technical session on strategic issues, with remarks focused on how long US product exports can continue growing.

3 **Mike Torbett** (left), **Rebecca Lieben** and **Bill McMullen** from Honeywell enjoyed their evening with one of the best views of the city.

4 The Force was with AFPM delegates as they enjoyed Tuesday evening's festivities.

5 **Michael Krenek** (pictured) and **Jim Guill** of Deloitte Services led a discussion about the future of chemicals in a full technical session.

6 Shell's **Mark Parris** explained how to achieve an operator-ownership culture at Tuesday's technical session on operations and turnarounds.

7 Snake eyes! Visitors to **Athlon Solutions'** casino-themed party received instructions as they 'gambled' the night away.

8 A funky local trio entertained **Merichem** customers.

9 The luck o' the Irish was in full swing at the **Albemarle** suite, including a whiskey tasting.

10 Many AFPM delegates ventured out into the city to experience the fine dining and perfect evening weather.

WE'RE SAVING A SEAT FOR YOU!

2016 AFPM MEETINGS

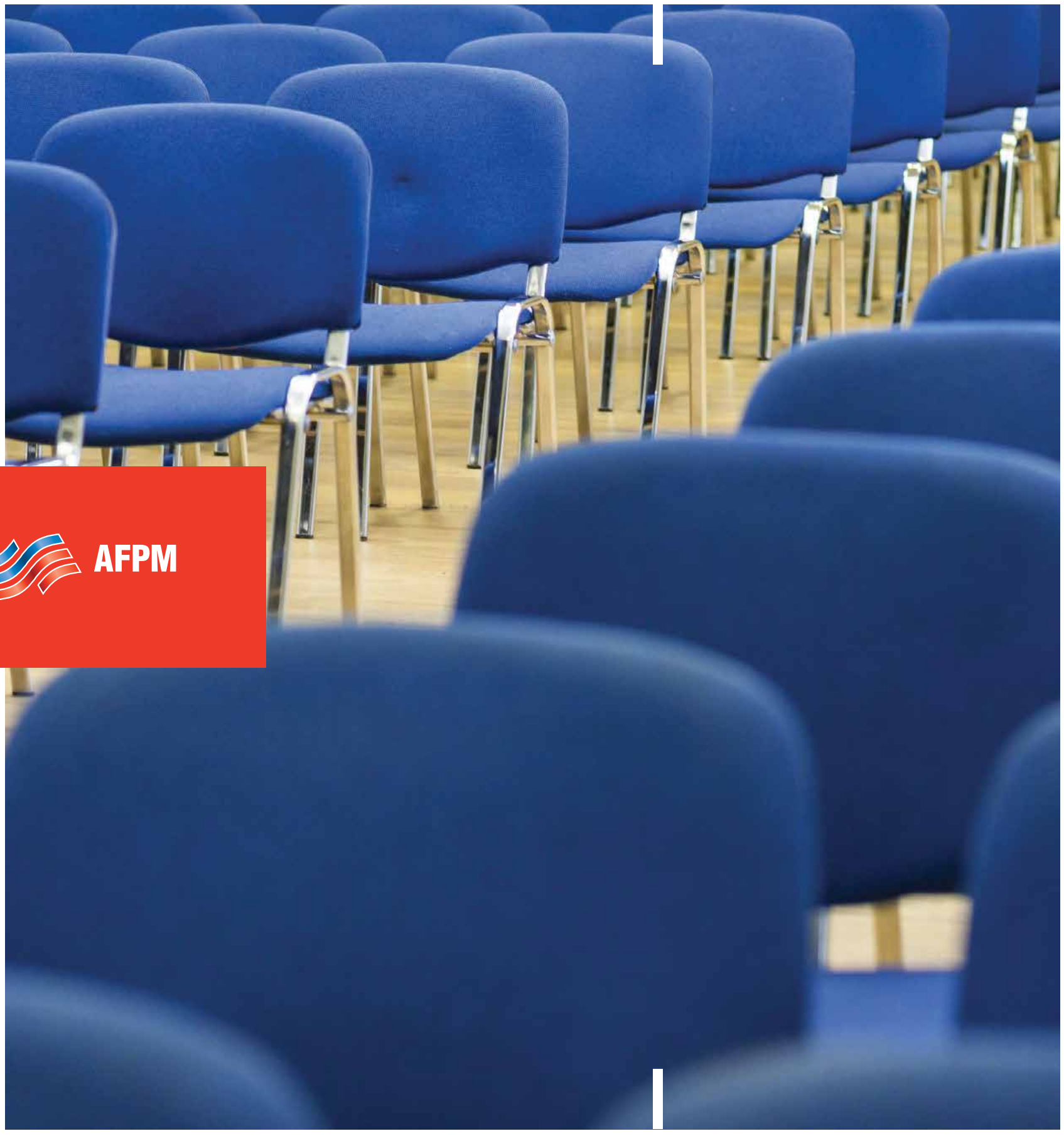

AFPM

International Petrochemical Conference
March 20-22, Dallas, TX

Security Conference
April 11-13, Houston, TX

Labor Relations/
Human Resources Conference
April 14-15, Houston, TX

National Occupational & Process Safety Conference
May 16-18, San Antonio, TX

Reliability & Maintenance Conference and Exhibition
May 24-27, San Antonio, TX

Cat Cracker Seminar
August 23-24, Houston, TX

Q&A and Technology Forum
September 26-28, Baltimore, MD

Environmental Conference
October 16-18, New Orleans, LA

International Lubricants & Waxes Conference
November 10-11, Houston, TX

Official Annual Meeting Show Daily
Published By
HYDROCARBON PROCESSING®

afpm.org

2016 | AFPM

Tüpraş

Johnson Matthey
Process Technologies

Tüpraş Residue Upgrading Project (RUP)

"Fantastic professional support provided by Johnson Matthey"

Complete solutions for your refinery hydrogen plant operations

Getting it right from the start; having the right people in the right place at the right time is vitally important to achieve a flawless start-up and to ensure the future successful unit operation. Recently Johnson Matthey Process Technologies (JMPT) experienced Refineries Regional Support Engineers supported the start-up of the Hydrogen plant at the Tüpraş Izmit RUP project. From classroom training to the catalyst loading, catalyst reduction and unit start-up the JMPT team was involved with the Tüpraş team. The classroom training provided catalyst technical knowledge to the site engineers while uniquely engaging them in specific face-to-face discussions about their plant operation during the start-up as well as the future operation. Establishing close collaboration between the plant operators, plant designer, EPC contractor commissioning team and the catalyst supplier are crucial to ensure a successful unit start-up.

Beyond the plant start-up, JMPT understands how truly invaluable a thorough understanding of unit design and operation is to the catalyst life cycle achieved and maintained. JMPT has demonstrated that it has the technical capacity to carry out this support across the Tüpraş Hydrogen plant fleet, where the **KATALCO$_{JM}$**™ catalysts have been installed, commissioned and are successfully operating. Our dedicated technical support team is on hand to provide a range of services during start-up throughout the life of the catalyst and beyond.

Customer focus and collaboration, leading Johnson Matthey into our third century.

UK Tel +44 (0)1642 553601
Fax +44 (0)1642 522542

www.jmprotech.com